Industrial filtration

Zeta Plus installation qualification test procedure

Purpose

The purpose of the Installation Qualification (IQ) test is to determine if Thermo Scientific™ Zeta Plus™ Filter Cartridges have been properly installed and sealed in a filter housing. This procedure is specifically intended for use with Zeta Plus cartridge grades 50, 60, 70, and 90. The procedure can be used for 8, 12, and 16 inch nominal diameter cartridge sizes. This document defines the general procedure and the necessary equipment required to determine if the Zeta Plus cartridge(s) have been properly installed in the filter housing. This procedure does not attempt to establish or define any correlation between the measured drop in pressure during the test and the ability of the filter to reduce or remove contaminants from the fluid being filtered.

General

Equipment and materials required

- Stop watch
- 0 - 5 psi (0" - 137" H2O) pressure measuring device with + 0.25% FS accuracy
- Programmable automatic test instrument (optional)
- Clean, dry regulated gas pressure source reagents
- Water

Safety and handling requirements

- Safety glasses with side shields must be worn at all times.
- Wear appropriate safety clothing and equipment as recommended in the MSDS for the fluid being filtered and operating conditions.
- Do not exceed the maximum pressure ratings for the test equipment and filter housings.
- Always vent the filter housing before opening.

Procedure

Hardware qualification test (ref. Figure 1)

1. Close and seal filter housing.
2. Close valves A, D, E, and F open valve C.
3. Attach a manual test assembly or an appropriate electronic test instrument to vent valve C.

NOTE: A manual test assembly consisting of an air regulator (capable of adjusting the out put pressure in increments of 0.05 psi) equipped with a 0 - 5 psi pressure measuring device (accuracy + .25% F.S.) followed by a shut-off valve (ball or needle type) (Ref. Figure 1A.)

4. Enter the following test parameters when a programmable electronic test instrument is used (table below):
5. Pressurize the filter housing to 2.9 psi (200 mbar).
6. When a manual test assembly is used, after three minutes (180 seconds), close valve B and start the stop watch.
7. After three minutes (180 seconds), record the pressure on the test gauge.
8. If the pressure is less than 2.83 psi (196 mbar) the system is leaking. Identify the source of the leak and stop it.
9. Repeat steps 1 through 8 until the pressure recorded at the end of the three minute test period is greater than 2.83 psi, then proceed to Cartridge Qualification Test.

Stabilization time	180 seconds (3 minutes)
Pressure hold test time	180 seconds (3 minutes)
Test pressure	2.9 psi (200 mbar)
Maximum allowable pressure decay	0.07 psi (5 mbar)

Cartridge qualification test (ref. figure 1)

1. If attached, remove the manual test assembly or electronic test instrument from valve C.

2. Open the housing and install and seal the Zeta Plus filter cartridge(s) in the filter housing.

3. Close and seal filter housing.

4. Close valves A, D, E, and F; open valve C.

5. Connect the inlet of the filter housing to a filtered water source.

(Note: The water should be filtered to a level equal to or better than the micron rating of the filter being tested.)

6. Fill the housing with water by slowly opening inlet valve A.

7. When fluid emerges from valve C, close the valve while simultaneously opening either outlet valve E or drain valve D.

8. Flow a volume of water through the filter that is equivalent to 54 L/m^2 of filter medium at a flow rate equal to or greater than the anticipated process flow rate.

9. Enter the following test parameters when a programmable electronic test instrument is used (table below):

Draining time	300 seconds (5 minutes)
Stabilization time	180 seconds (3 minutes)
Pressure hold test time	180 seconds (3 minutes)
Low drain pressure	0.87 psi (60 mbar)
High drain pressure	1.16 psi (80 mbar)
Test pressure	1.45 psi (100 mbar)
Maximum allowable pressure decay	0.73 psi (50 mbar)

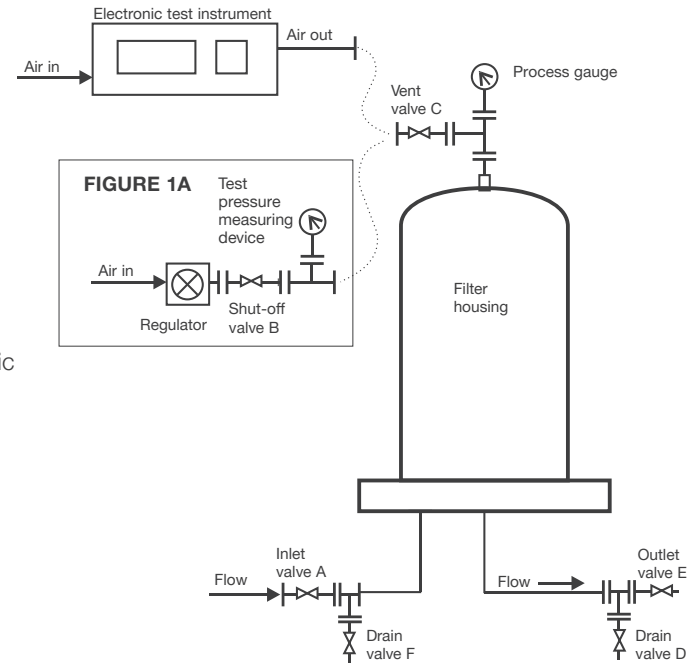

Figure 1. - Test assembly

10. Close valve A and open drain valve F.

11. Pressurize the filter housing to between 0.87 to 1.16 psi (60 - 80 mbar) using either the electronic test instrument or the manual test assembly.

12. When a manual test assembly is used, after five minutes (300 seconds), inspect drain lines D (or E) and F to determine if bulk water flow has stopped. If bulk water flow has not stopped, allow the housing to continue to drain until the water flow is reduced to a trickle. When bulk water flow stops close only drain valve F and proceed to Step 14. Valves D (or E) should remain open during the test.

13. When an electronic test instrument is used, after five minutes (300 seconds), inspect drain lines D (or E) and F to determine if bulk water flow has stopped. If bulk water flow has not stopped, discontinue the test and reprogram the instrument for a longer drain period. Prior to the start of the stabilization period, the water flow rate through valves D (or E) and F should be reduced to a trickle (Note: Do not reprogram instrument for a higher drain pressure setting.) When bulk water flow stops, immediately close only drain valve F. Valves D (or E) should remain open during the test.

14. Allow the electronic test instrument to complete the pre programmed test cycle and print out the test result.

15. When a manual test assembly is used, carefully increase the pressure to 1.45 psi and then close valve B and start the stop watch. (Note: Do not to exceed 1.45 psi.)

16. After three minutes (180 seconds), record the pressure on the test gauge.

17. If the pressure reading is greater than 1.16 psi, the installation has passed the IQ test.

18. If the pressure reading is less than 1.16 psi, either the cartridge(s) is damaged, improperly installed, or both. Check the installation by completing the following:

A. Disconnect the test assembly and relieve the pressure on the filter housing by opening vent valve C.

B. Open the housing and inspect the cartridge(s) for damage, replace if damaged.

C. Inspect seal nut and seal nut O-rings for signs of damage, replace if damaged.

D. Inspect cartridge(s) flat gaskets or O-ring for signs of damage, replace if damaged.

19. Repeat Steps 1 through 18 as required.

Intended Use: Zeta Plus filter cartridge products are intended for use in industrial, chemical, food and beverage and electronics filtration applications of aqueous and non-aqueous fluids in accordance with the product instructions, specifications and where materials of construction are compatible. Certain Zeta Plus products are compliant for use in Food and Beverage applications. For specific details related to the use or limitations for food contact applications please contact your Thermo Fisher Scientific representative for more information.
Since there are many factors that can affect a product's use, the customer and user remain responsible for determining whether the Thermo Scientific product is suitable and appropriate for the user's specific application, including user risk assessments and evaluation of the Thermo Scientific product in the user's application.

Restrictions on Use: Thermo Fisher Scientific Inc. advises against the use of these Thermo Scientific products in any application other than the stated intended use(s) since other applications have not been evaluated by Thermo Fisher and may result in an unsafe or unintended condition. Do not use in any manner whereby the Thermo Scientific product, or any extractable or leachable from the Thermo Scientific product, may become part of or remain in a medical device, drug, cosmetic, supplement, infant formula; or in applications involving life-sustaining medical applications or prolonged contact with internal bodily fluids or tissues.

Technical Information: The technical information, guidance, and other statements contained in this document or otherwise provided by Thermo Fisher are based upon records, tests, or experience that Thermo Fisher believes to be reliable, but the accuracy, completeness, and representative nature of such information is not guaranteed. Such information is intended for people with sufficient knowledge and technical skills to assess and apply their own informed judgment to the information. No license under any Thermo Fisher or third-party intellectual property rights is granted or implied with this information.

Product Selection and Use: Many factors beyond Thermo Fisher's control and uniquely within user's knowledge and control can affect the use and performance of a Thermo Scientific product in a particular application. As a result, customer is solely responsible for evaluating the product and determining whether it is appropriate and suitable for customer's application. Failure to properly evaluate, select, and use a Thermo Scientific product and appropriate safety products, or to meet all applicable safety regulations, may result in injury, sickness, death, and/or harm to property.

ALISMA FILTRATION

Authorised distributor of Thermo Scientific™ products in France.

www.alisma-filtration.com

For more information, contact your Thermo Fisher Scientific sales representative or visit **thermofisher.com/industrialfiltration**

thermo scientific

© 2026 Thermo Fisher Scientific Inc. All rights reserved. All trademarks are the property of Thermo Fisher Scientific and its subsidiaries unless otherwise specified. **TCN-14574785 GBL 0426**